Hiruko - Akatsuki
(Naruto Shippuuden)



papercraft

by

Antyyy


Antyyy's Papercrafts
Everything ANIME made out of paper!


Antyyy's Papercrafts
Everything ANIME made out of paper!


Antyyy's Papercrafts
Everything ANIME made out of paper!


Antyyy's Papercrafts
Everything ANIME made out of paper!


Antyyy's Papercrafts
Everything ANIME made out of paper!


Antyyy's Papercrafts
Everything ANIME made out of paper!



8/14 (row2 col4)


Antyyy's Papercrafts
Everything ANIME made out of paper!



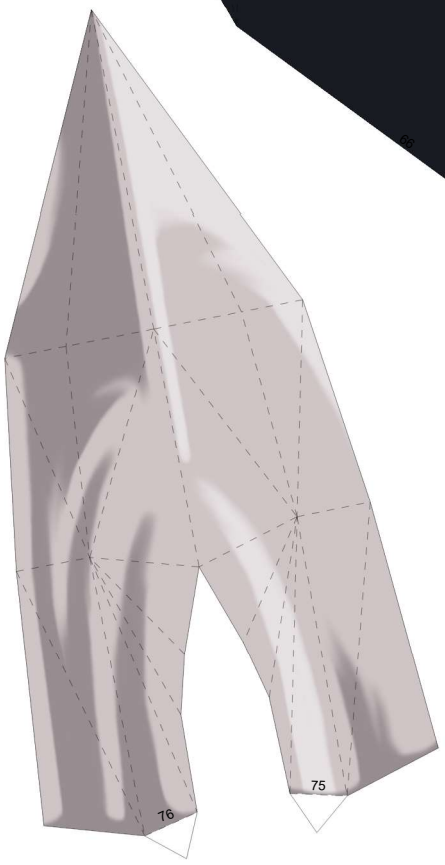
76
75

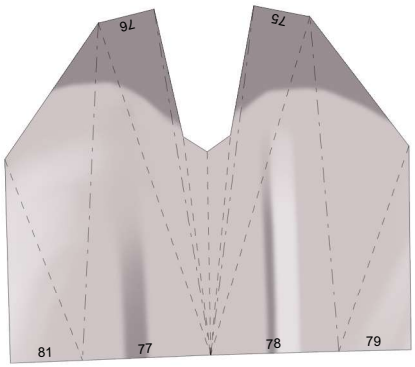
76
75
81
77
78
79


386
305
418
52
13

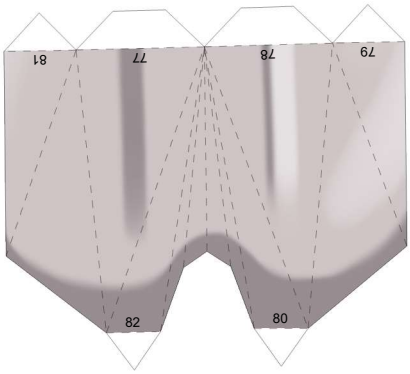
81
77
78
79
82
80

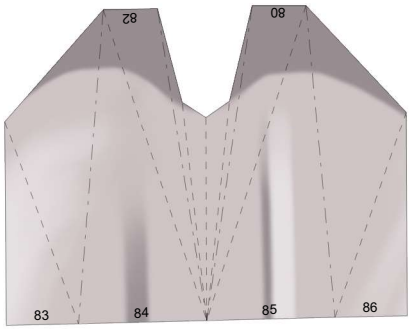
82
80
83
84
85
86

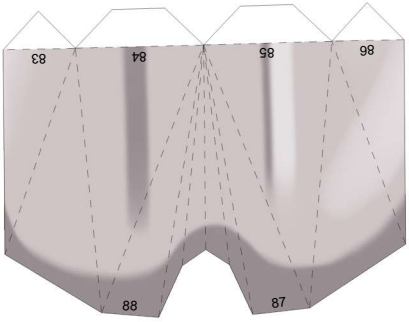
83
84
85
86
88
87

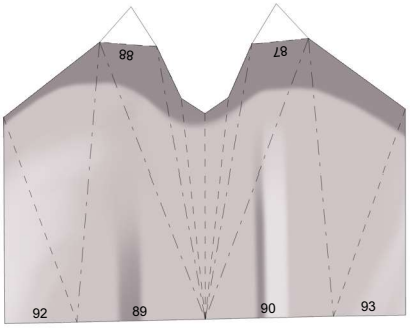
88
87
92
89
90
93


Antyyy's Papercrafts
Everything ANIME made out of paper!

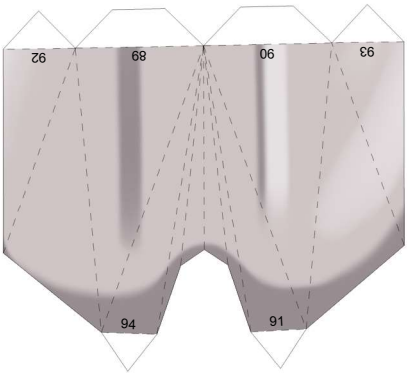
92
89
90
93
94
91

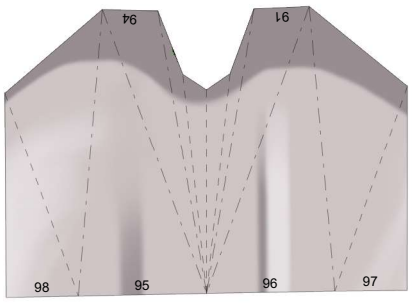
94
91
98
95
96
97

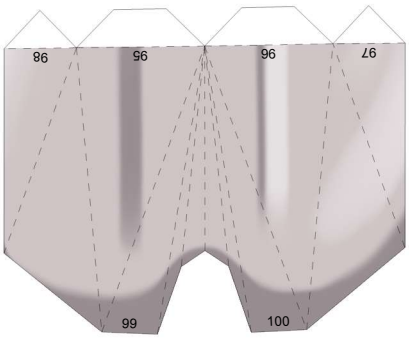
98
95
96
97
99
100

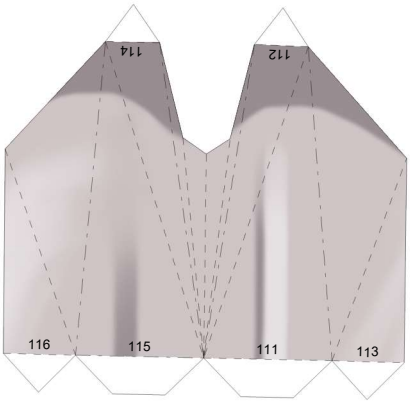
114
112
116
115
111
113

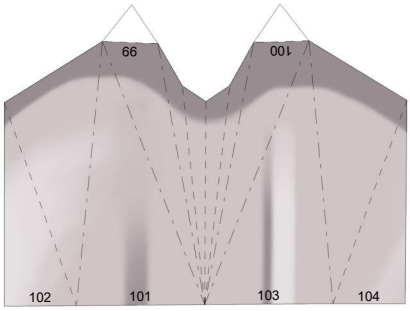
99
100
102
101
103
104

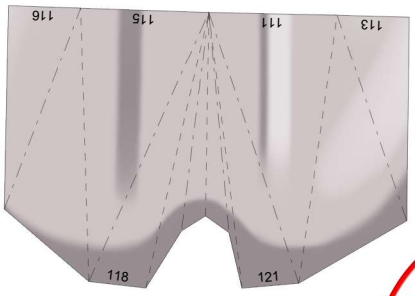
116
115
111
113
118
121

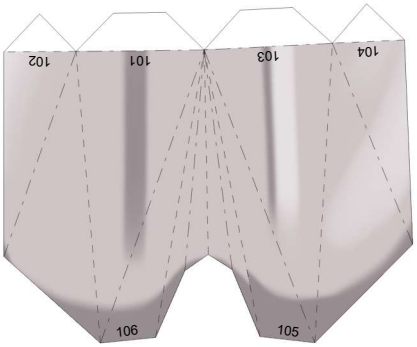
102
101
103
104
106
105


Antyyy's Papercrafts
Everything ANIME made out of paper!

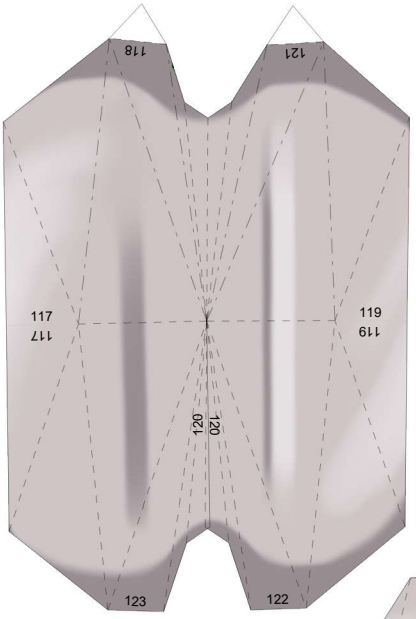
118
121
117
117
119
119
120
120
123
122

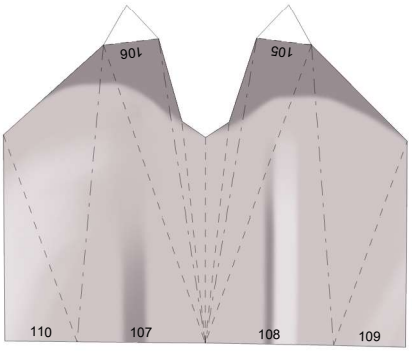
106
105
110
107
108
109

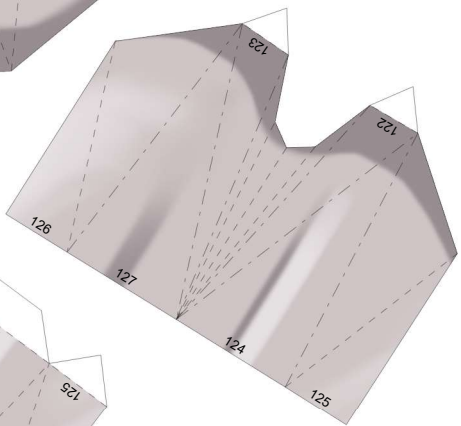
123
122
126
127
124
125

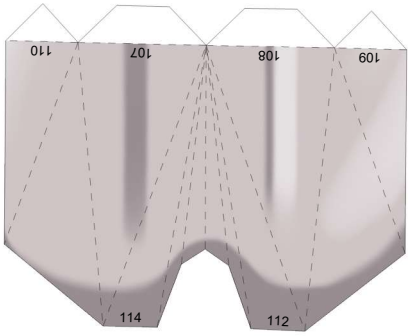
110
107
108
109
114
112

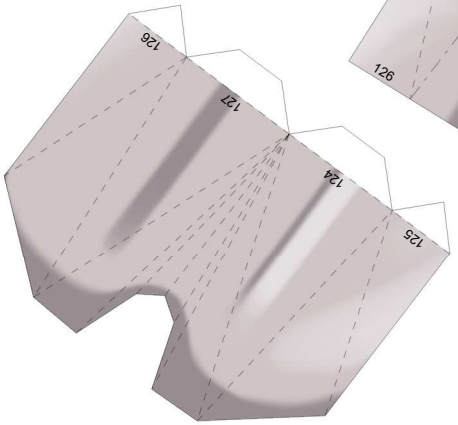
126
127
124
125

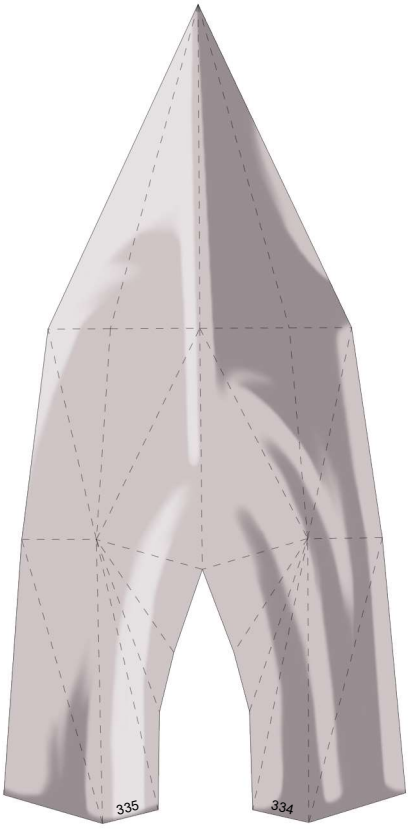
335
334

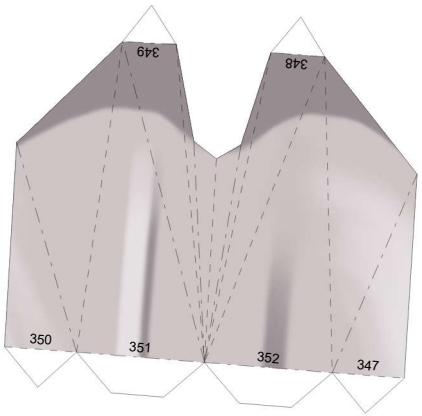
349
348
350
351
352
347

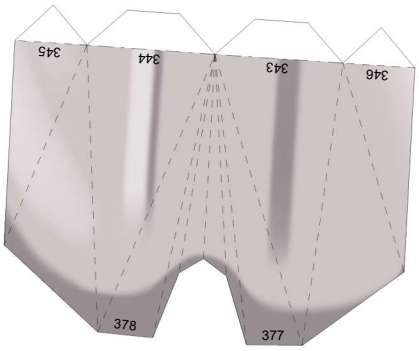
345
344
343
346
378
377

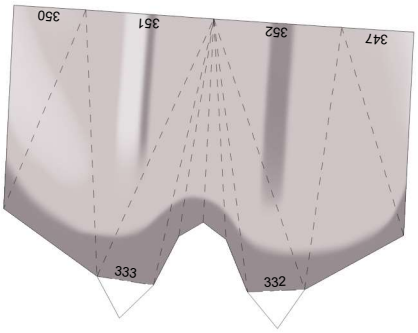
350
351
352
347
333
332

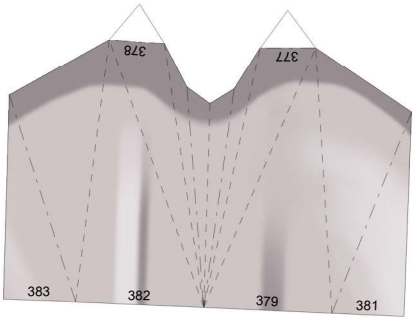
378
377
383
382
379
381

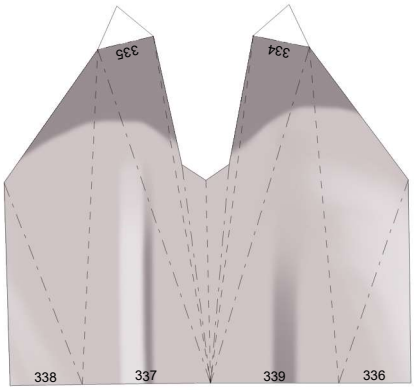
335
334
338
337
339
336

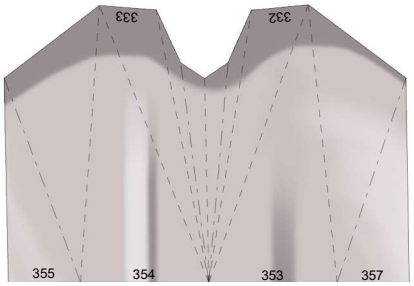
333
332
355
354
353
357

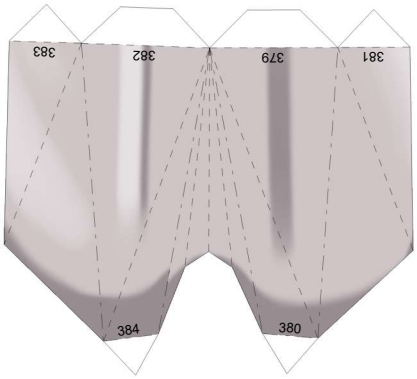
383
382
379
381
384
380

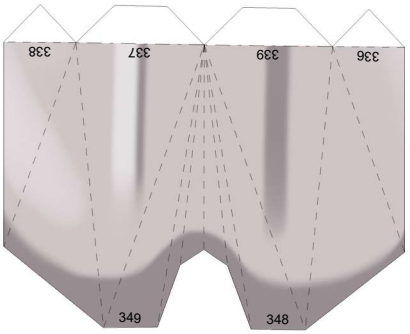
338
337
339
336
349
348

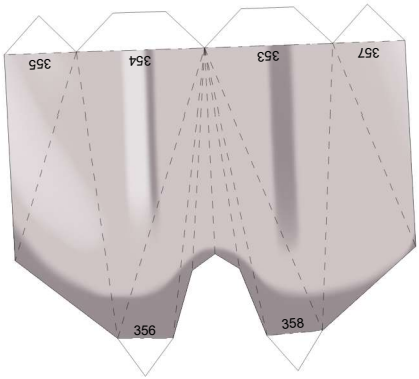
355
354
353
357
356
358

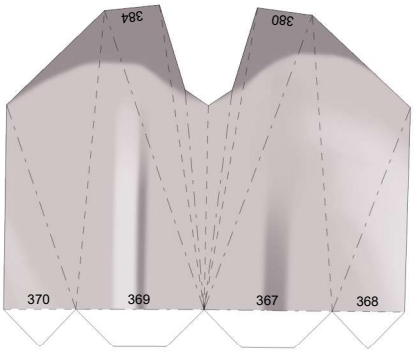
384
380
370
369
367
368

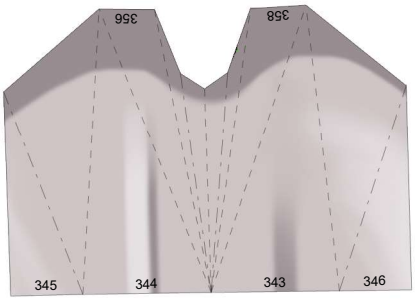
356
358
345
344
343
346


Antyyy's Papercrafts
Everything ANIME made out of paper!

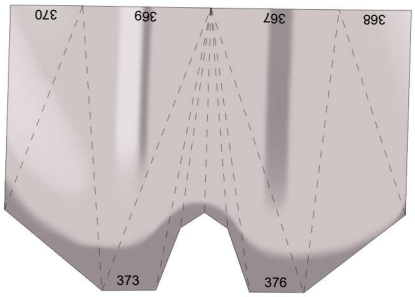
370
369
367
368
373
376

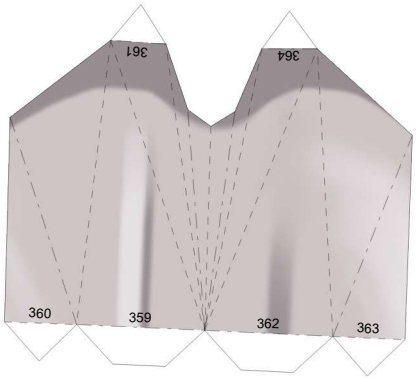
361
364
360
359
362
363

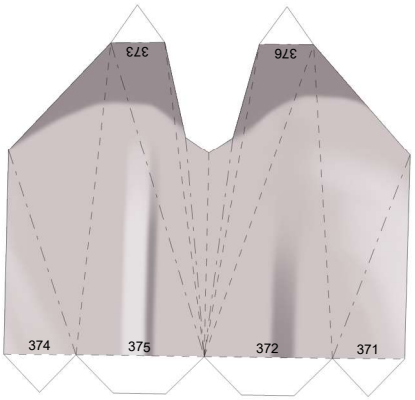
373
376
374
375
372
371

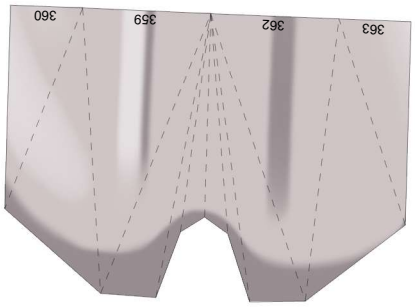
360
359
362
363

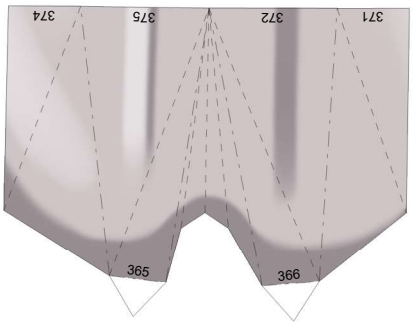
374
375
372
371
365
366


Antyyy's Papercrafts
Everything ANIME made out of paper!

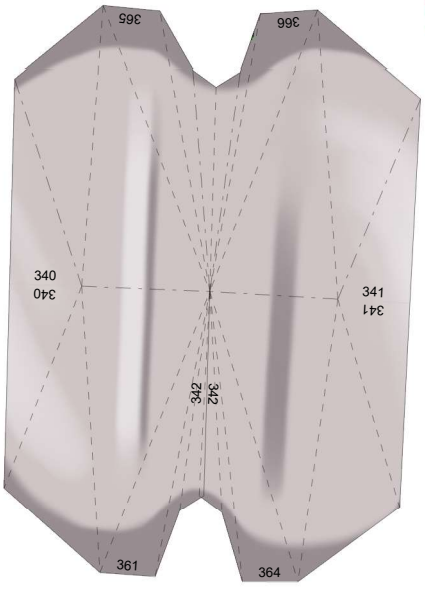
365
366
340
340
341
341
342
342
361
364



Visit me on:

Deviantart.com/antyyy

Facebook.com/AntyyysPapercrafts

Patreon.com/antyyyspapercrafts

Antyyyspapercrafts.blogspot.com

Pixiv.net/en/users/12367064